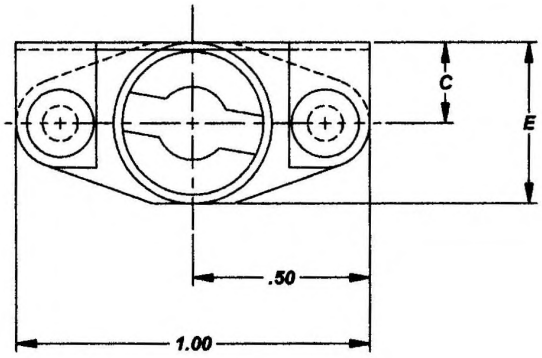

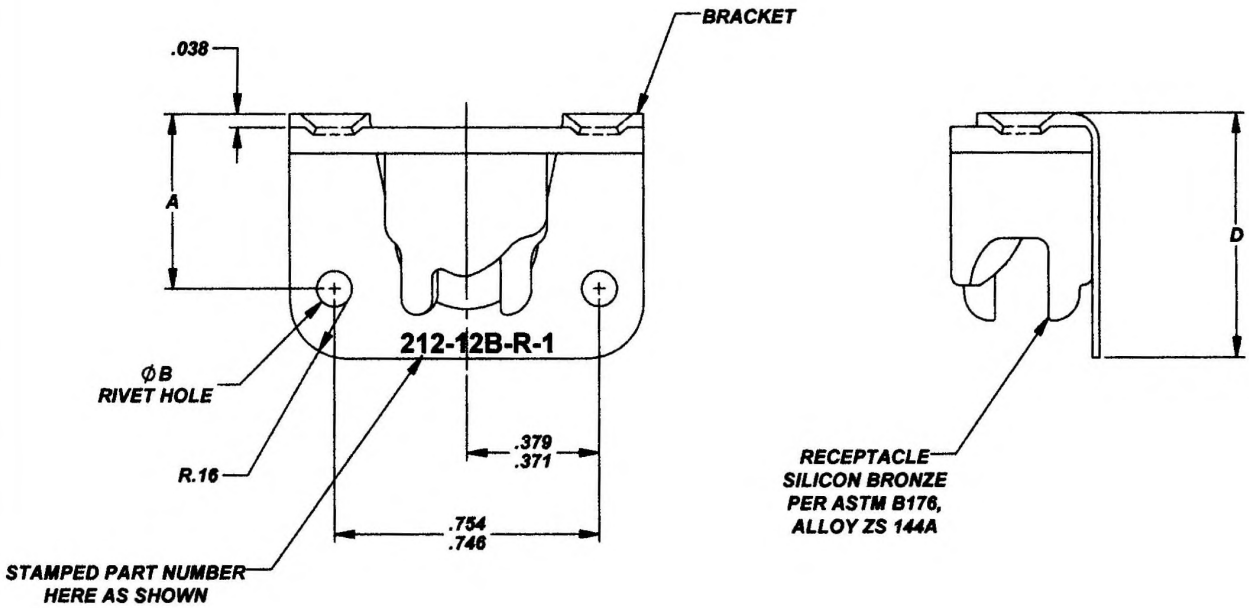

TABLE 1

PART NUMBER	A		B		C	D	E	BRACKET		RECEPTACLE FINISH	WEIGHT LBS/100
	MIN	MAX	MIN	MAX				MATERIAL	FINISH		
212-12B-R	.485	.495	.096	.102	.22	.68	.45	STEEL CRES, PER ASTM A240, CLASS 302	PASSIVATED	CADMIUM PLATE PER AMS-QQ-P-416, CLASS 2,	1.736
212-12B-R-1	.485	.495	.113	.119	.22	.68	.45				1.730
212-12B-R-2	.307	.317	.096	.102	.22	.68	.45				1.736
212-12B-R-3	.391	.401	.096	.102	.31	.59	.53				1.736
212-12B-R-4	.485	.495	.096	.102	.22	.68	.45	STEEL CARBON PER ASTM A684, FS 1065	CADMIUM PLATE PER AMS-QQ-P-416, CLASS 2, TYPE II (OLIVE DRAB)		1.730
212-12B-R-10	.485	.495	.096	.102	.22	.68	.45	STEEL CRES, PER ASTM A240, CLASS 302	PASSIVATED	NICKEL PLATE PER AMS2403	1.736

NOTES; UNLESS OTHERWISE SPECIFIED:

1. FOR INSTALLATION DATA AND STUDSELECTION INFORMATION, SEE CAMLOC CATALOG.

INTERIM DOCUMENT REVISION		
Rev.	Date	DAF#
M1	10/8/2018	117431

APPROVED DATE	CURRENT DESIGN ACIVITY:	TITLE:	CURRENT DESIGN ACIVITY:
30 NOV 00	ARCONIC Arconic Fastening Systems	RECEPTACLE BRACKET TYPE	CAGE CODE: 71286
REV. LETTER AND DATE M 16 JAN 17			SALES DRAWING NO.
DAF NUMBER DAF 115165	CAMLOC PRODUCTS 3012 W. LOMITA BLVD. TORRANCE, CA. 90505	UNLESS OTHERWISE SPECIFIED DIMENSIONS ARE IN INCHES & ASME Y14.5M TOLERANCES: ANGLES = ±1° DECIMALS .XX = ±.02 .XXX = ±.010	212-12B-R SHEET 1 OF 1

S45589